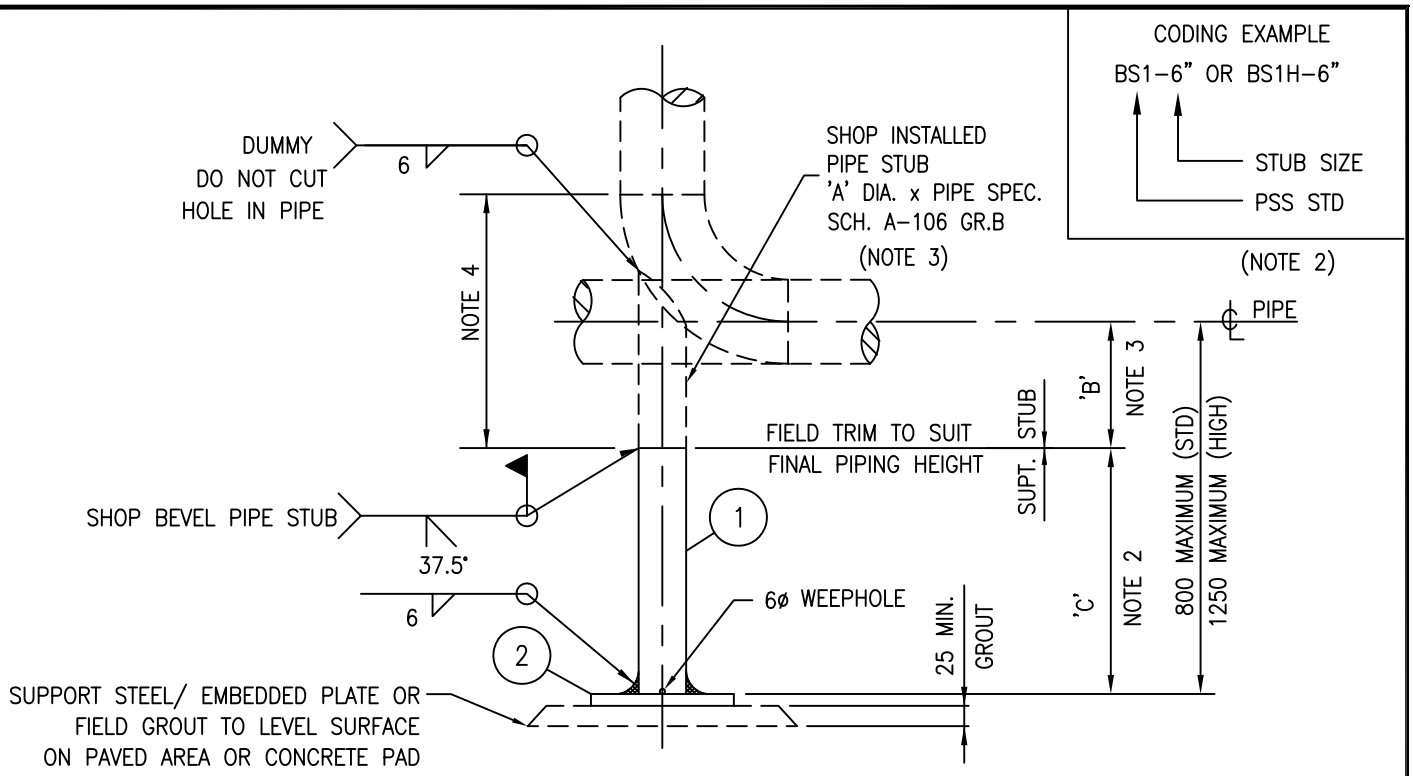

PIPE SIZE	A	SUPT. SCH.	B	C STD	C HIGH (NOTE 2)	D	T
2"	1 1/2"	XS	150	650	1100	150	10
3"	2"	XS	170	630	1080	150	10
4"	3"	STD	200	600	1050	180	10
6"	4"	STD	220	580	1030	220	10
8"	6"	STD	250	550	1000	270	12
10"-12"	8"	STD	300	500	950	320	12
14"-16"	12"	STD	350	450	900	420	12
18"-20"	14"	STD	400	400	850	450	20
22"-24"	16"	STD	450	350	800	500	20

MARK No.	DESCRIPTION	No. REQ'D
1	'A' DIA. x 'C' LG. C.S. A-106 Gr.B	1
2	PLATE 'T' THK. x 'D' x 'D' - G40.21 GR.300W	1

NOTES:

1. SUPPORT TO BE CENTERED ON BASE PLATE
2. USE SUFFIX 'H' FOR HIGH TYPE eg. BS1H
3. PIPE STUB MATERIAL WILL BE SHOWN AS PIPE IN THE ISOMETRIC B.O.M.
   THE SUPPORT CODE WILL IDENTIFY THE STUB SIZE ON THE FACE OF THE ISOMETRIC
4. ON ELBOW STUBS THIS DIMENSION IS SHOWN ON THE ISOMETRIC AND IS THE PIPE STUB LENGTH REQUIRED. BEFORE WELD PREPARATION TO ALLOW "B" PROJECTION
5. DO NOT USE FOR GALVANIZED PIPE. SEE BS3 ON PSS-BS03
6. IF A REPAD IS REQUIRED, SEE RP2 ON PSS-RP02.

REV	REVISION	DATE	DRN	CHK	ENG	APP
0	ISSUED FOR CONSTRUCTION					

CLIENT

PREPARED BY

TITLE

PIPE SUPPORT STANDARD
NPS 2" TO NPS 24" BASE SUPPORT
BS1/BS1H

SCALE	DWG. No.	PROJ.	REV.
N.T.S.	PSS-BS01		0
	CLIENT DWG. No.		